POWER Defender 270
VARIABLE SPEED PUMP

2.7 HP

Part #: PD-VSC270
Model #: ECONO-VSC

2-Piece Lid Assembly
for improved access & serviceability!

Energy ENERGY STAR

Part #: PD-VSC165
Model #: ECONOVSC-165

POWER Defender 165
VARIABLE SPEED PUMP

1.65 HP

FEATURES:

- Provides impressive savings up to 90% on your energy bill. Can save up to $1,500 per season*
- May be eligible for rebates from your local power utility**
- Pump is pressure testable up to 50 PSI
- User-Friendly programming
- Optional off-board mounting of controls.
- Ability to install and program additional load (booster pump, chlorine generator)
- Display is easy to view in any light
- 2" Swivel Union (included) & 2" FPT
- Super quiet operation with built-in freeze protection
- Adjustable Base (included) – Easy replacement for most brand pumps
- Compliant with all energy legislation. Meets Title 20 & Title 24 regulations

* This estimate is based on a 25,000 gallon swimming pool and comparing a traditional single speed pump running 8 hours per day with 1.8 turnover per day with the Waterway Variable Speed pump operating at one turnover per day. Actual saving may vary based on plumbing size and length, hours of operations, local electricity rate, etc.
* * Visit your local power utility company's website for details on available rebates.

Built-in Programmable User Interface with Timer

Both Power Defender Variable Speed Pumps are Energy Star Approved.

ENERGY STAR is a U.S. Environmental Protection Agency (EPA) voluntary program that helps businesses and individuals save money and protect our climate through superior energy efficiency.

2 Swivel Union Assemblies!

All Power Defender pumps come complete with 2 Swivel Unions... great for precise alignment and plumbing versatility.

Built-in Programmable User Interface with Timer

FEATURES:

- Maximum 1.65HP
- Timer Mode
- Full Variable Speed (600-3450 RPM)
- Freeze Protection
- Program Memory Back-up
- Keypad Lockout Feature
- 2" Swivel Union (included) & 2" FPT
- Adjustable Base (included) – Easy replacement for most brand pumps

675-1380

Power Defender 270 – 2.7 HP – Performance Curves

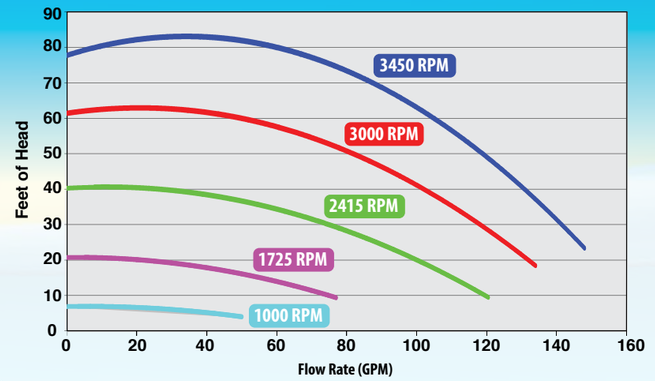

Power Defender – 1.65 HP – Performance Curves

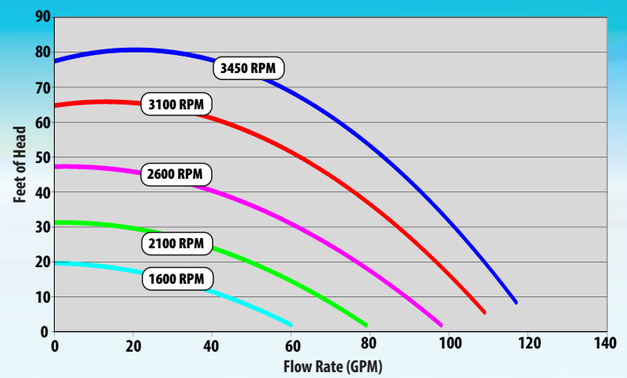

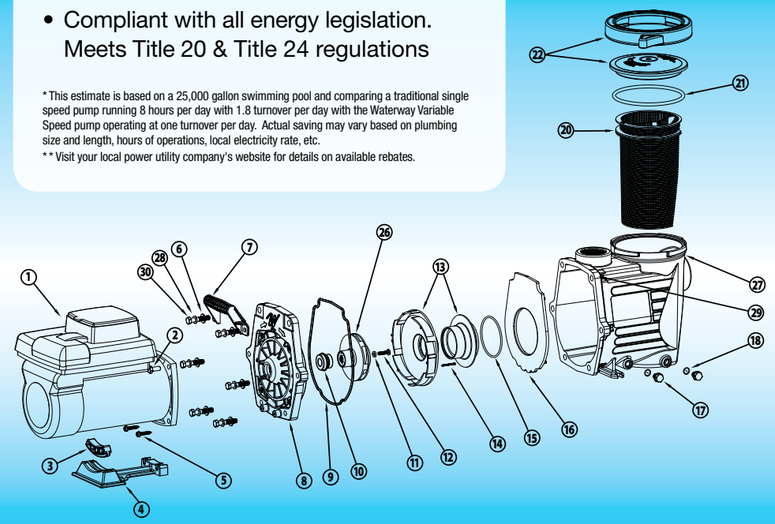

1	–	Motor
2	819-0035	Bolt .375-16 X .875 Long
3	672-1350	Motor Support Supra Max
4	319-1500	Motor Base
5	819-0013	Screw Slot Hex Washer 1/4" X 1_1/4"
6	820-0017	3/8" Flat Washer Type B, Pool Pumps
7	319-1700	Handle
8	311-1450	Face Plate
9	711-1400	Gasket, Face Plate
10	319-3100B	Pump Seal Set-Viton
11	711-4300	Washer, Impeller
12	819-4360	Screw Phil. Pan Head Left Hand 1/4-20 X 1"
13	310-7470	Diffuser Assy
14	819-0018	#4-40 Uncs Bolt Schs
15	805-0238	O-Ring-238
16	319-1420	Diffuser Plate
17	715-1200	3/8" Quarter Slot Plug (Sd Wet End)
18	805-0014	O-Ring, -014
20	319-1430	Basket Assy
21	805-0436	O-Ring, 6" Trap Lid
22	319-4100	Lid Assembly, 6" Trap
26	310-7430	2 HP Full 2.5 HP Upr Impeller Assy
27	315-2410	Pump Housing -¬2" X 2" Npt
28	820-0017-1	3/8" Washer, Split Lock
29	820-4280	Brass Insert, 3/8-16 Unc Housing
30	819-0016	3/8"-16 X 2" Lg Hex Head
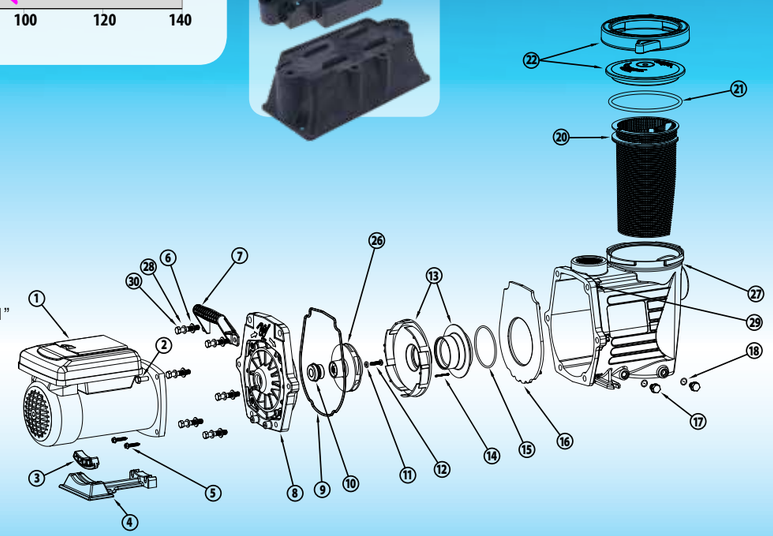
1	–	Motor
2	819-0035	Bolt .375-16 X .875 Long
3	672-1350	Motor Support Supra Max
4	319-1500	Motor Base
5	819-0013	Screw Slot Hex Washer 1/4" X 1_1/4"
6	820-0017	3/8" Flat Washer Type B, Pool Pumps
7	319-1700	Handle
8	311-1450	Face Plate
9	711-1400	Gasket, Face Plate
10	319-3100B	Pump Seal Set-Viton
11	711-4300	Washer, Impeller
12	819-4360	Screw Phil. Pan Head Left Hand 1/4-20 X 1"
13	310-7470	Diffuser Assy
14	819-0018	#4-40 Uncs Bolt Schs
15	805-0238	O-Ring-238
16	319-1420	Diffuser Plate
17	715-1200	3/8" Quarter Slot Plug (Sd Wet End)
18	805-0014	O-Ring, -014
20	319-1430	Basket Assy
21	805-0436	O-Ring, 6" Trap Lid
22	319-4100	Lid Assembly, 6" Trap
26	310-7430	2 HP Full 2.5 HP Upr Impeller Assy
27	315-2410	Pump Housing¬- 2" X 2" Npt
28	820-0017-1	3/8" Washer, Split Lock
29	820-4280	Brass Insert, 3/8-16 Unc Housing
30	819-0016	3/8"-16 X 2" Lg Hex Head